POPLAR 7MHz CW Transceiver Kit

Assemble Manual V5.1

Overview

"Poplar" is designed by DINUCO. It is controlled by STC8H1K17 single chip microcomputer, A PLL device is used as local oscillator, and a high-speed driver chip is used as MOS FET driver, which realizes the CW transmitting circuit with 5W Class E power output. At the same time, the receiving circuit is superheterodyne scheme, which realizes low noise and high sensitivity. The kit was developed by us, combined with the actual use of the domestic situation, corrected several key problems, after many debugging to form the current version.

The hardware described in this article is V5.0 and the main PCB labelled “POPLAR_5”.

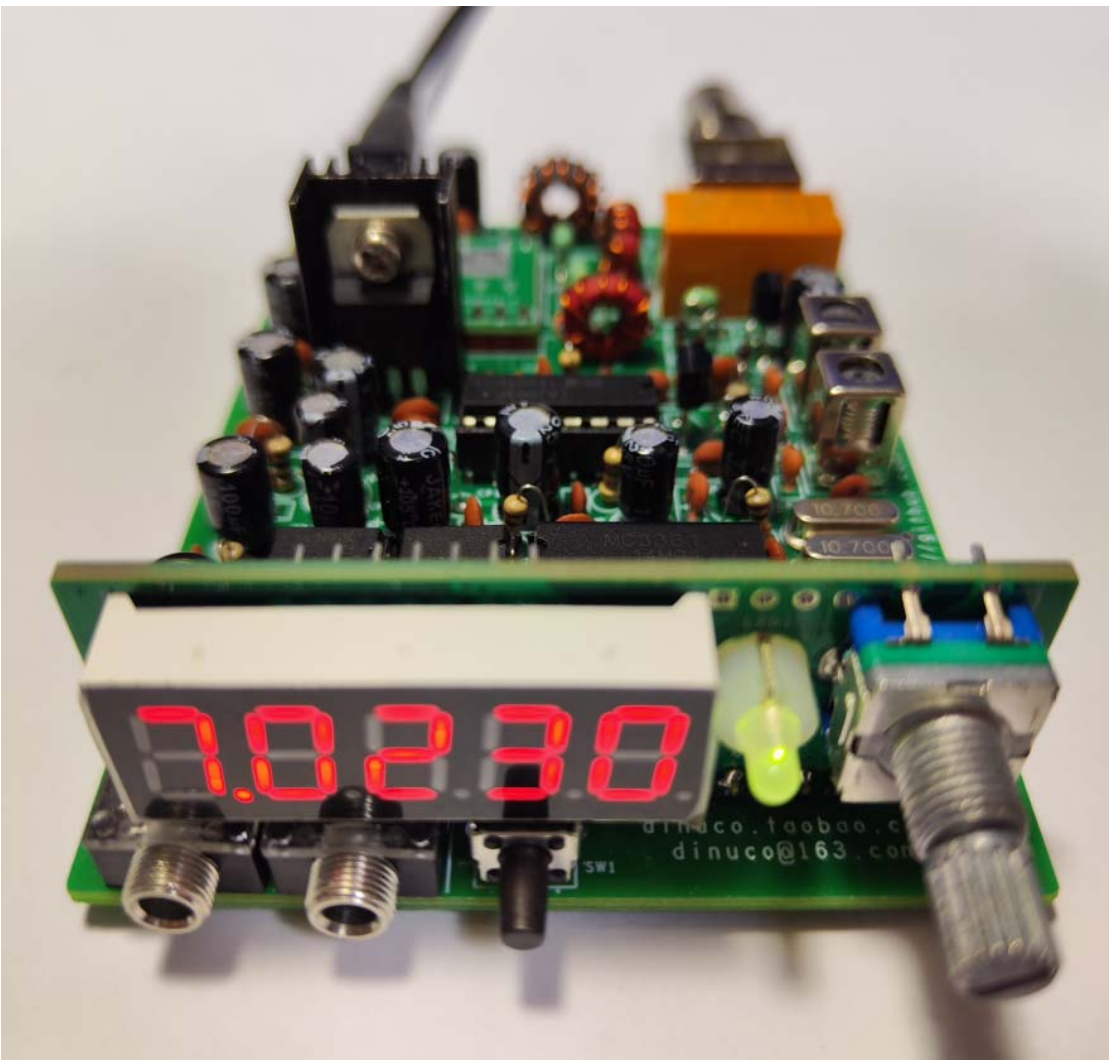

Specifications

Power supply: 12V-13.8V (linear regulated power supply is recommended)

Antenna: 50 ohms, unbalanced

Typical receive current: 100mA
Typical Transmit current: 900mA
Transmit power: 5W
Operating frequency: 7.000-7.300MHz
Working mode: CW

Circuit Description

Refer to the circuit diagram shown on the last page of this document.

The core of the receiving part is a TA2003, which includes a balanced mixer. After the signal coming from the antenna passes through the BPF filter, it enters the mixer of TA2003, and PLL sends the local oscillator signal. If signal through the crystal filter frequency selection, and then into the MC3361, there is a VXO in the MC3361, beat frequency with the IF signal, the output audio signal for amplification, so that the whole receiving process is completed.

In the transmitting part, A driver chip is used as a buffer to the MOS FET for class E amplification. Finally, the high-frequency signal is matched by the output impedance matching network, and then the antenna is connected after LPF filtering.

During transmission, the side tone is generated by the beat frequency of the transmitted and received signals. The change of the side tone frequency is accomplished by adjusting the VXO frequency of the MC3361, and the side tone volume is adjusted by the encoder.

Component selection

L2 is a magnetic ring inductor that is wound 12 times using 0.47mm enamelled wire on the N1065 ferrite ring (black).

L3 and L4 are matched and filtered inductors, and 0.47 mm enamelled wire is wound 11 and 9 times respectively on the iron powder core magnetic ring (red) of T37-2.

All capacitors less than 1000pF are high-frequency tiles, capacitors greater than 1uF are aluminum electrolytic capacitors, and all resistors are 1/4W 5% fixed resistors.

Assembly and Adjustment

Test all transistors, resistors and capacitors with a multimeter before installing all components. Then install all components against the circuit diagram and the markings on the PCB board.

Generally follow the low to high order of installation. First weld the patch module, and then weld the plug-in device. After welding, check whether there is a solder short circuit.

Due to the MOS field effect tube in the kit, in order to prevent electrostatic breakdown, the soldering iron should be properly grounded or disconnected from the soldering iron power supply and used for waste heat welding.

After welding is completed, do not install devices to the integrated circuit socket, power on to check whether +5V is normal, if abnormal, it means that the MOS FET may weld breakdown, after checking +5V and then install devices to the integrated circuit socket, which can effectively avoid the core integrated circuit welding bad.

Remove the pin that not used on DRV board。

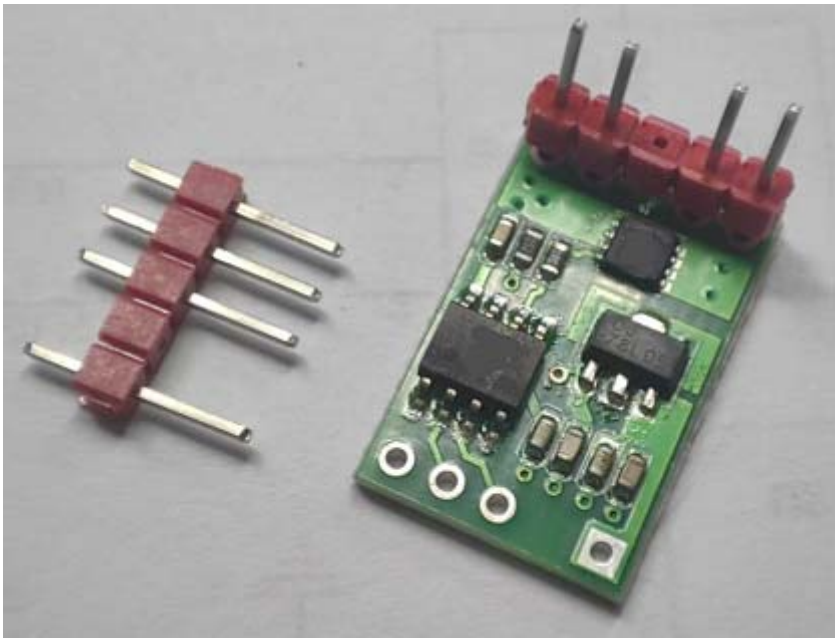

Please refer to the following figure for the installation direction of the DRV driver board.

Pay attention to the LED direction.

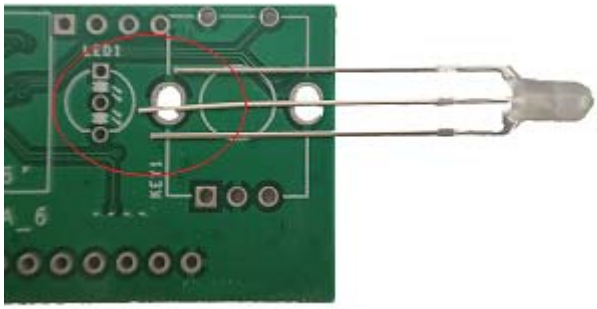

HUI KE

Everything is in order, check and then connect the power supply, the positive and negative polarity of the power supply must not be connected wrong. Plug your Walkman headphones into the headphone socket and you should hear white noise. Attach 51 ohm resistance to the antenna end to make a false load, access the key, and detect the whole machine emission current, which should be about 0.7A. Do not short connect the KEY launch for a long time, otherwise the pseudo load heating is relatively large.

When receiving, select a frequency signal, carefully adjust T1 and T2, and receive the maximum sound. It is recommended to use a non-inductive driver or a plastic driver for adjustment.

The power plug(5.5/2.1) requirements of the machine are as follows:

Debugging steps without instrument:

1 Connect a 3-meter cable to the antenna socket and power it on.

2 The electric display frequency of the machine is 9.810, and the encoder can be gently adjusted to a certain AM broadcasting station.

3 At this time, the ear will appear broadcast sound, adjust T1 so that the noise is the highest and the noise is the lowest.

Instructions for use

This device supports only manual keys.Key plug wiring diagram is below:

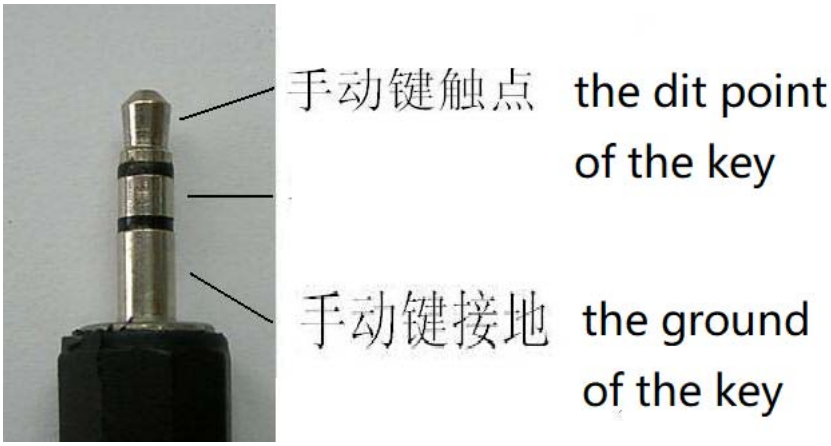

When adjusting the frequency, if you press the encoder once, the machine will automatically change from 1KHz step to 10KHz step, which is convenient for quick adjustment, if you press the encoder again, the machine will return to 1KHz step.

1 After the machine is powered on for the first time, the machine is in frequency adjustment mode by default, and the digital LED displays numbers, representing the frequency value. The

panel display as the following:

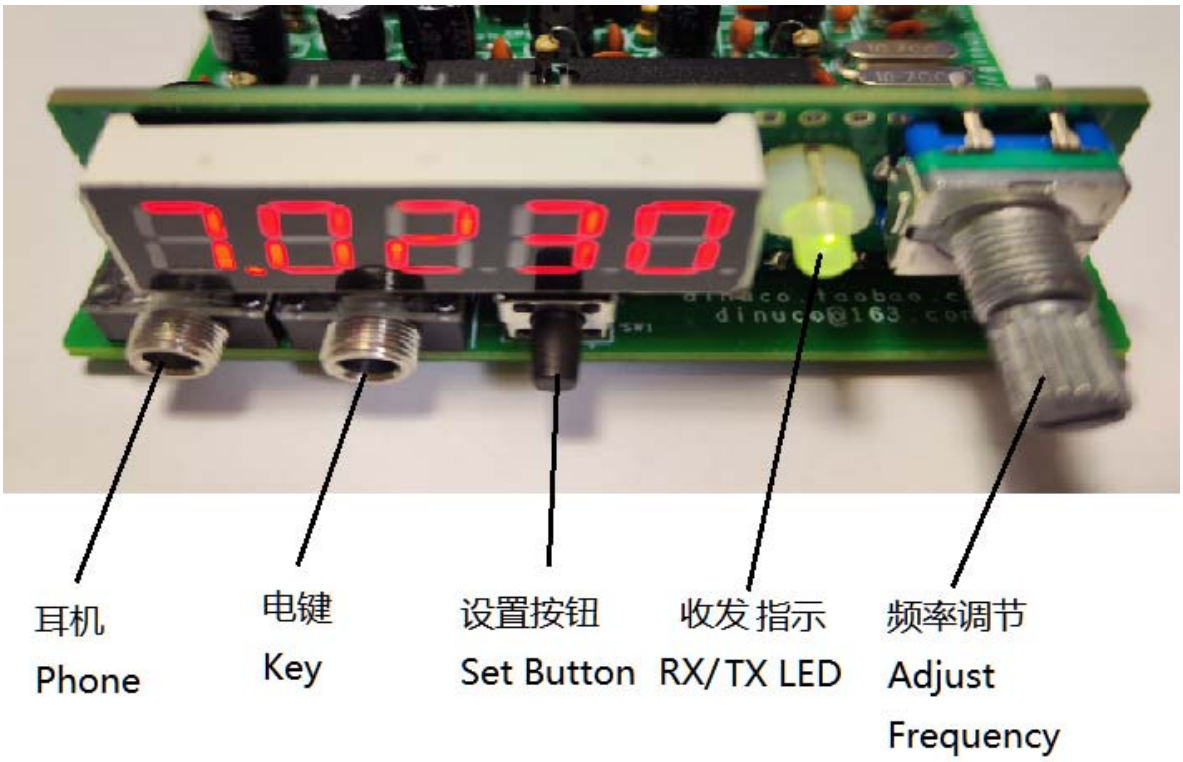

2 Do not press the SET button first, rotate the encoder to see whether the display frequency of the digital LED display changes.

3 Connect the antenna or fake load, press the set button, then C1_15 will be displayed, keep pressing the button, exit the configuration mode when C4_68 is displayed, and enter the working mode again. All modes are described as follows:

C1 15 Sound Settings. The default is 15 and can be adjusted between 0 and 25. The higher the volume, the louder the sound.

C2 15 Squelch threshold setting, default 15, can be adjusted between 0-25, the larger mean the stronger audio signal.

C3 15 Side tone adjustment setting. The default value is 15, which can be adjusted from 0 to 25. The larger the side tone, the higher the side tone.

C4 55 crystal filter center frequency setting, the default setting is 55, the unit is 100Hz, the default IF frequency is 10 695000Hz +55*100Hz, if there is an error in the IF frequency, not aligned with the filter center frequency, you can fine-tune this value.

C5 53 25MHz Clock offset. The default value is 53 (unit: 100Hz). The default frequency is 25000Hz +53*100Hz. If there is any error in the receiving frequency, the 25MHz clock frequency on the PLL small board can be measured by the frequency meter, and the clock frequency offset can be adjusted according to the test value.

Note: C4 C5 can only be set with instruments and experience, and the modified value will not take effect immediately. You need to exit the configuration mode and adjust the working frequency to take effect.

Because it takes time to configure the EEPROM in the MCU, do not power off at will during configuration to avoid misoperation.

If the configuration is wrong, do not panic, hold down the SET key, re-power on, the machine will be restored to the default setting according to the SET key state.

Chassis mounting

This circuit board can be conveniently placed in a standard aluminum profile case with a size of 76mm*35mm*100mm (this case is not included in this kit, please purchase it yourself if necessary).

Parts List

1/4Wresistor		
R1,R2,R13	100	
R3,R7,R10,R12	1K	
R4	47K	
R5	10K	
R6,R8	10	
R9	100K	
R11	470	
Magnetic beads, inductors, transformers		
T1,T2	7x7 IF transformer	
L1	10uH	
L1	N1065 Magnetic ring	
L3,L4	T37-2 Magnetic ring	
B1	T120604	Common-mode inductance
Quartz crystal resonator		
X1,X2,X3,X4,X5	10.7MHz	
Chip capacitance		
C1,C2,C3,C4,C18,C19,C20, C21,C26,C27,C28,C29	0.1uF(104)	
C5,C8,C9,C11,C13,C14	47pF	
C6,C15	100pF(101)	
C7,C10,C12,C16,C17,C25	0.01uF(103)	
C22,C24	27pF	
C23	2pF	
CC4 capacitance		
CC1	330pF	
CC2,	2200pF(222)	

CC3	560pF(561)	
CC4,CC5	1000pF(102)	
Electrolytic capacitance		
CP1,CP7,CP10,CP12,CP13	100uF /25V	
CP2,CP3,CP4,CP6	10uF /25V	
CP5,CP8,CP9,CP11,CP14	220uF /25V	
Adjustable capacitance		
CX1	9/50pF	
transistor		
D1,D2,D3,D4	1N4148	
D5	P6KE16A	
Q1	J310	
Q2	8050	
Switch		
SW1	Button	
IC		
U1	TA2003（DIP16）	with IC socket
U2	MC3361（DIP16）	with IC socket
U3	FM62429（DIP8）	with IC socket
U4	LM386（DIP8）	with IC socket
U5	7805（TO220）	with heat sink
U6	PC817	
Other device		
J1	CON10 Inserting pin	Connected to the LED display board
J2	Speaker socket	SPK
J3	3.5mm stereo socket	SPK（ audio output ）
J4	BNC（Q9） socket	
J5	Power socket	
J6	DRV driver board	
J7	3.5mm stereo socket	KEY（key insert）
K1	HK19F-12V relay	
Blank PCB board ×1pcs and DRV board ×1pcs		

Diameter 0.47mm enamelled wire
The display board includes a circuit board, a 3mm LED, a digital LED display, and an encoder

After receiving the device, please check whether there is any missing, please contact us if there is any problem.

PCB Assembly Drawing

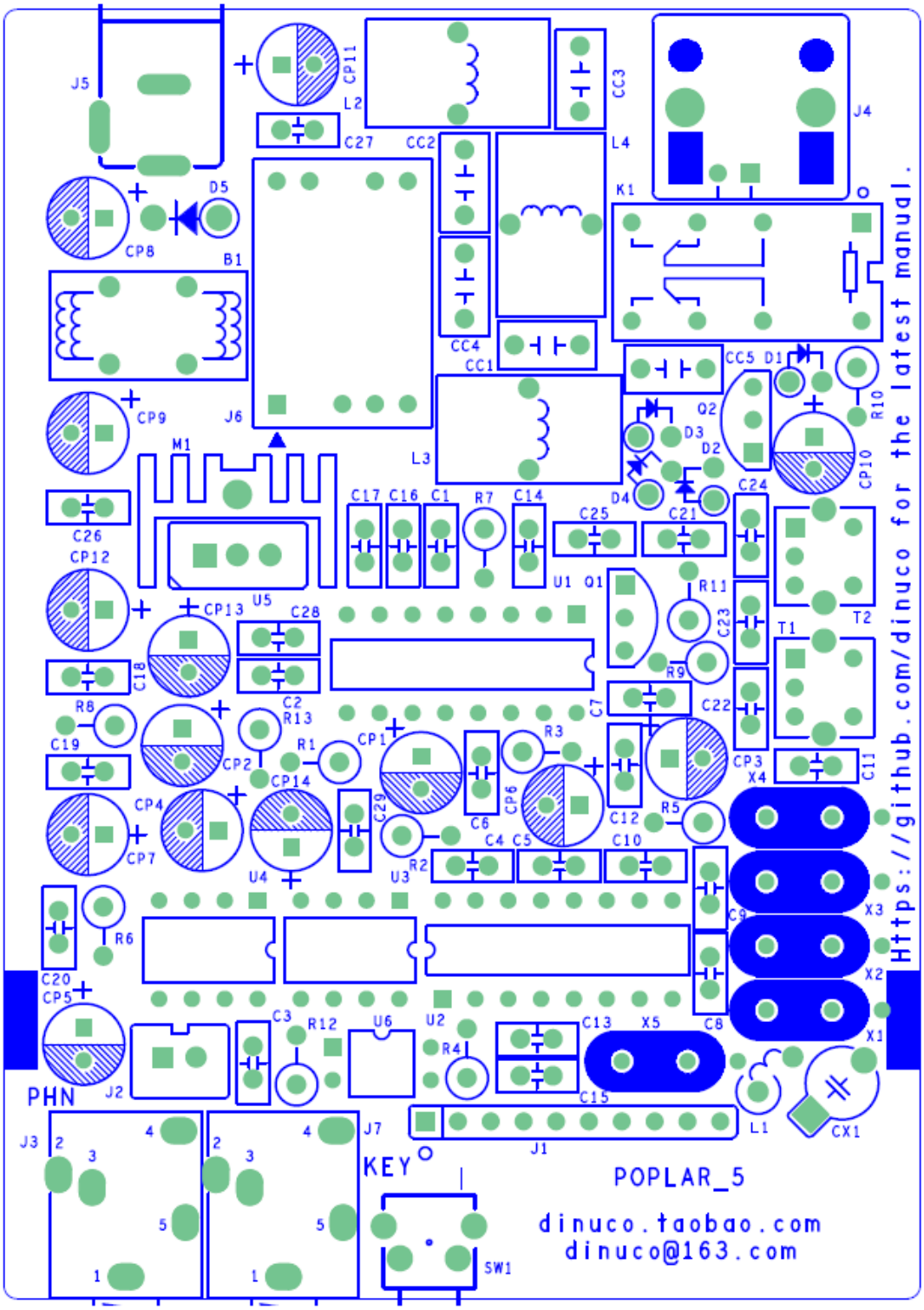

Resistor Color Codes and Ceramic Capacitor Identification

Resistors are marked using colored bands. Most resistors are 5% accuracy parts and marked with four bands. Less common 1% accuracy resistors are marked with 5 color rings. The following table can be used to read the value of these resistors:

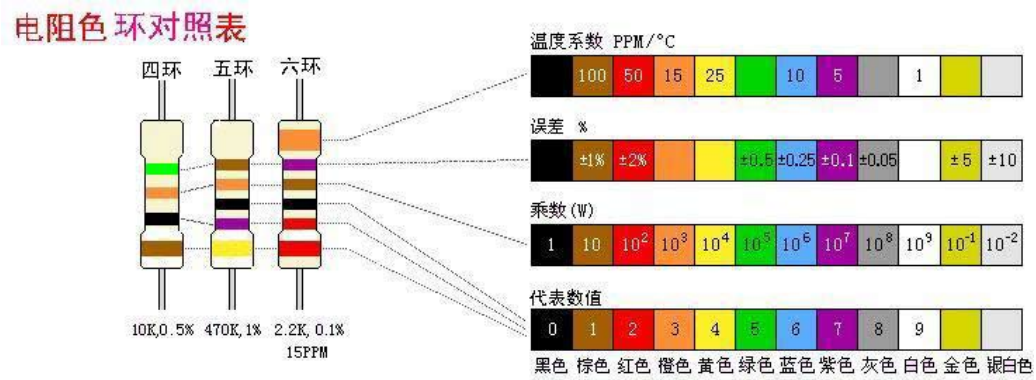

The capacitance of ceramic capacitors is generally denoted in units of pF (p meaning pico or 10^-12). However, some parts are directly labeled, such as 1000p, 220p, etc.

Most are labelled in exponential terms, such as 102,221. The first two digits are two most significant digits of the capacitor's value, the last digit being the number of zeros added after these digits. For example, "102" means that the leading digits are 10, while 2 means that 2 more zeros are added, i.e. 1000pF. Similarly, "221" means that the leading digits are 22, and 1 means that one further zero is added, i.e. 220pF.

62 here means 62pF

102 here means 1000pF

Polarity of Electrolytic Capacitors

Electrolytic capacitors are polarised. Please make sure that the positive and negative pins of these capacitors correspond correctly to the PCB markings when inserting these parts.

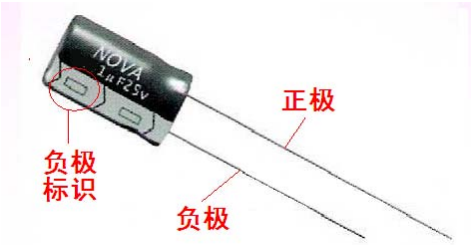

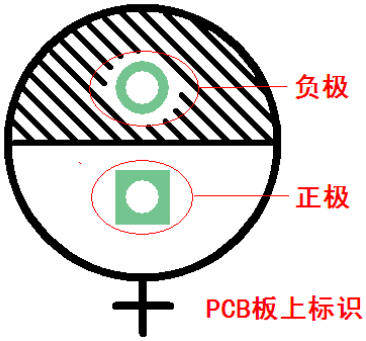

IC Identification

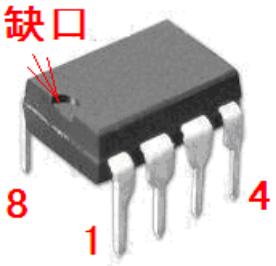

8 脚直插管脚排列

Identification of Transistors and Diodes

TO-92 package pin arrangement 1N4148 diode polarity P6KE16A diode polarity

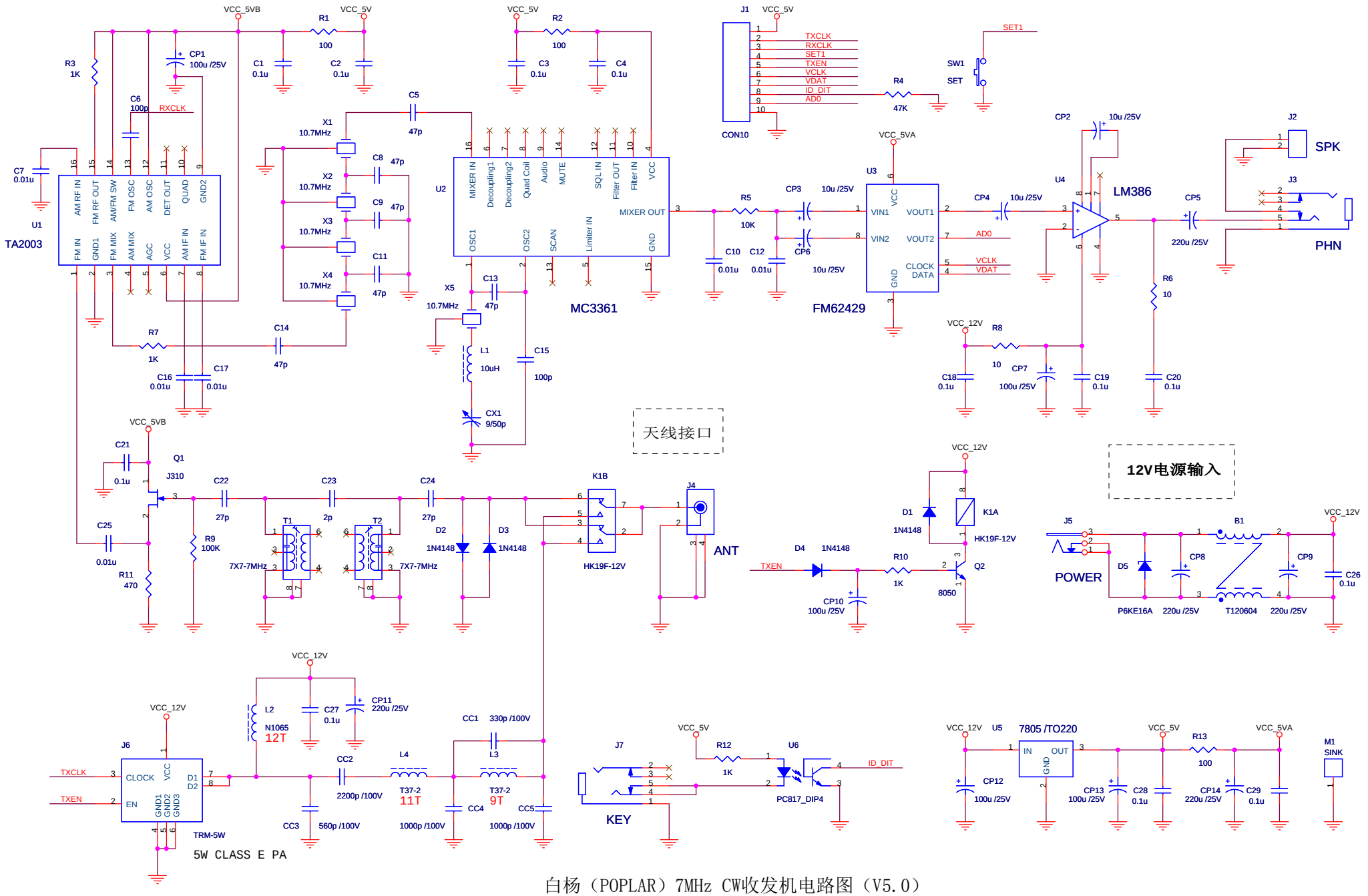

白杨（POPLAR）7MHz CW收发机电路图（V5.0）
淘宝店：dinuco.taobao.com
邮　箱：dinuco@163.com

Title	01.MAIN
Size A3	Document Number POPLAR_5
Rev	5.0
Date:	Monday, November 17, 2025
Sheet	1 of 1

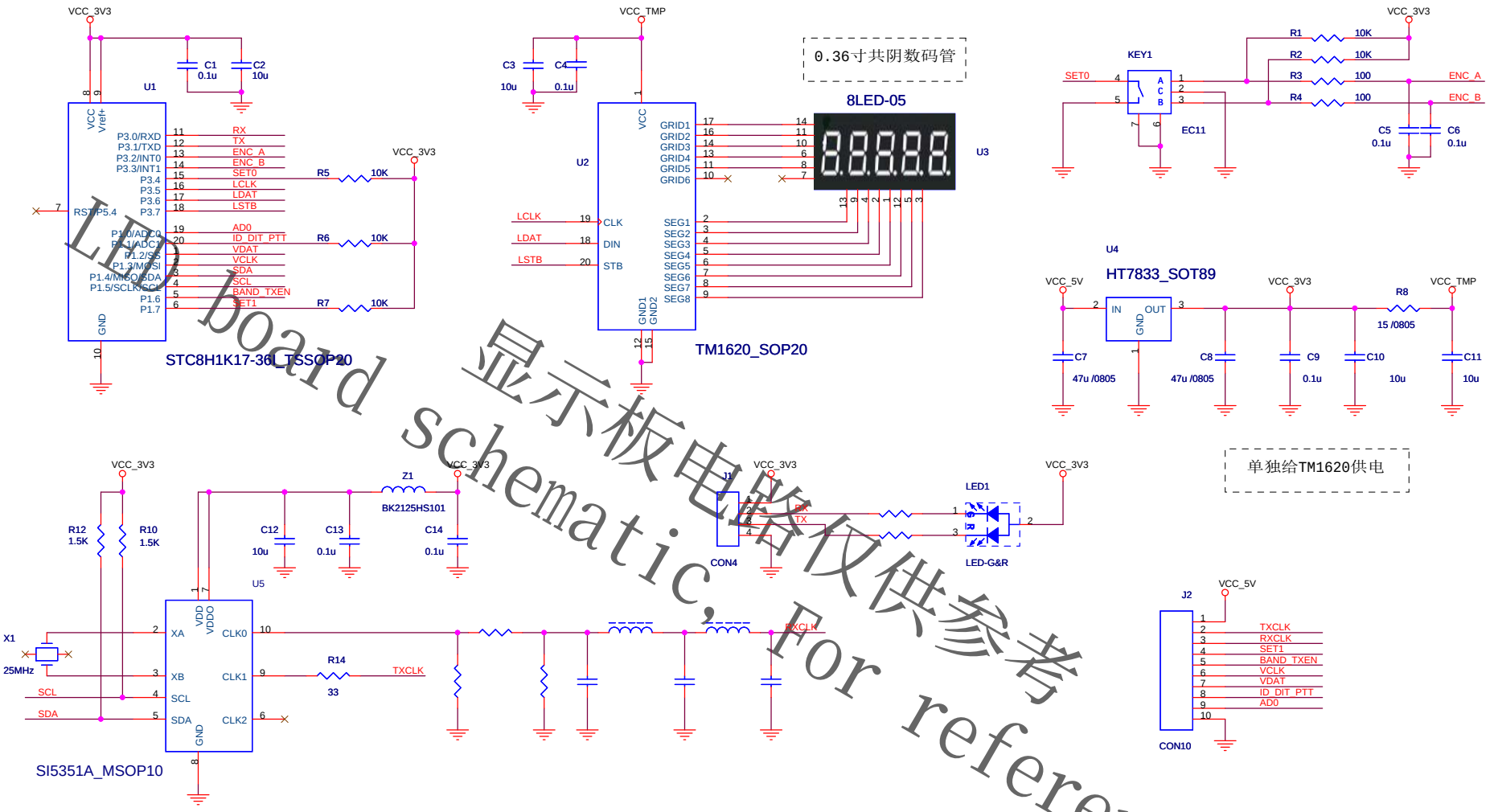

LED board schematic, For reference only
显示板电路仅供参考

Title	01.MAIN
Size A3	Document Number HM00LEDA_6
Rev	6.0
Date:	Monday, November 17, 2025
Sheet	1 of 1